PURUS



Item 7138444

BH50 Sediment trap in acid-resistant stainless steel for Purus’ Kitchen Channels and Bigg and Heavy floor gullies. The sediment trap is used to collect particles such as sand and gravel, so they do not fill up the water trap. The sediment trap can be removed for cleaning and maintenance.

Specifications

Item Number	7138444
Dimension	Ø220 mm
Function	For Bigg and Heavy
Item Color	Stainless
Material	Acid-resistant stainless steel 1.4404
Surface	Pickled

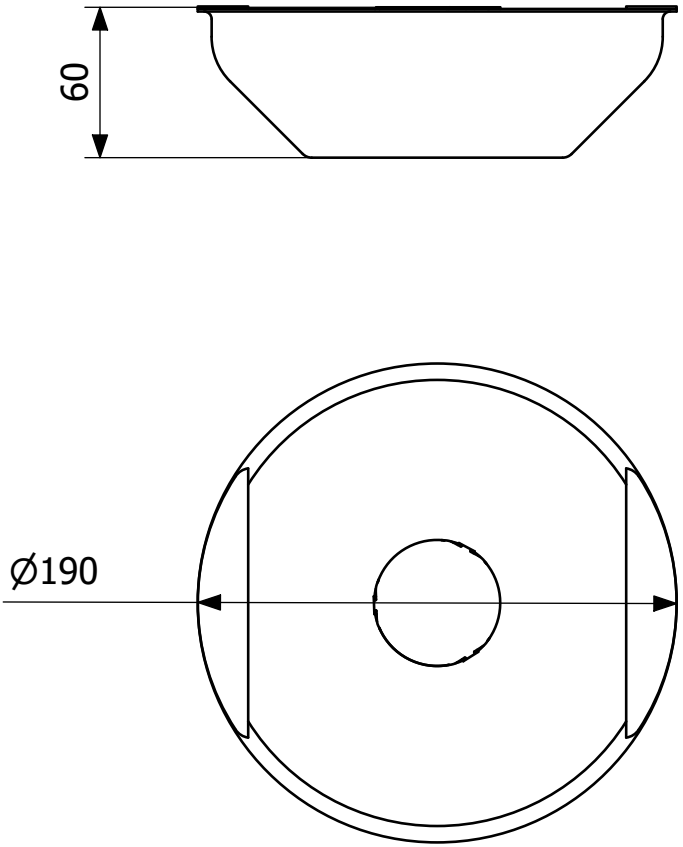
60
Ø190