PURUS



Item 07167

Filter bucket in acid-resistant stainless steel with a volume of 2.4 litres, designed to fit the Kitchen Channels and Slot Drain Modular when used with an extension ring. The filter bucket is used to collect particles larger than 5mm, such as leaves, so they do not block the water trap. The filter bucket can be removed for emptying and cleaning.

Specifications

Item Number	07167
Function	For Ø220 mm drains
Item Color	Stainless
Material	Acid-resistant stainless steel 1.4404
Pressure Flow Temp	3,2 l/s
Surface	Pickled

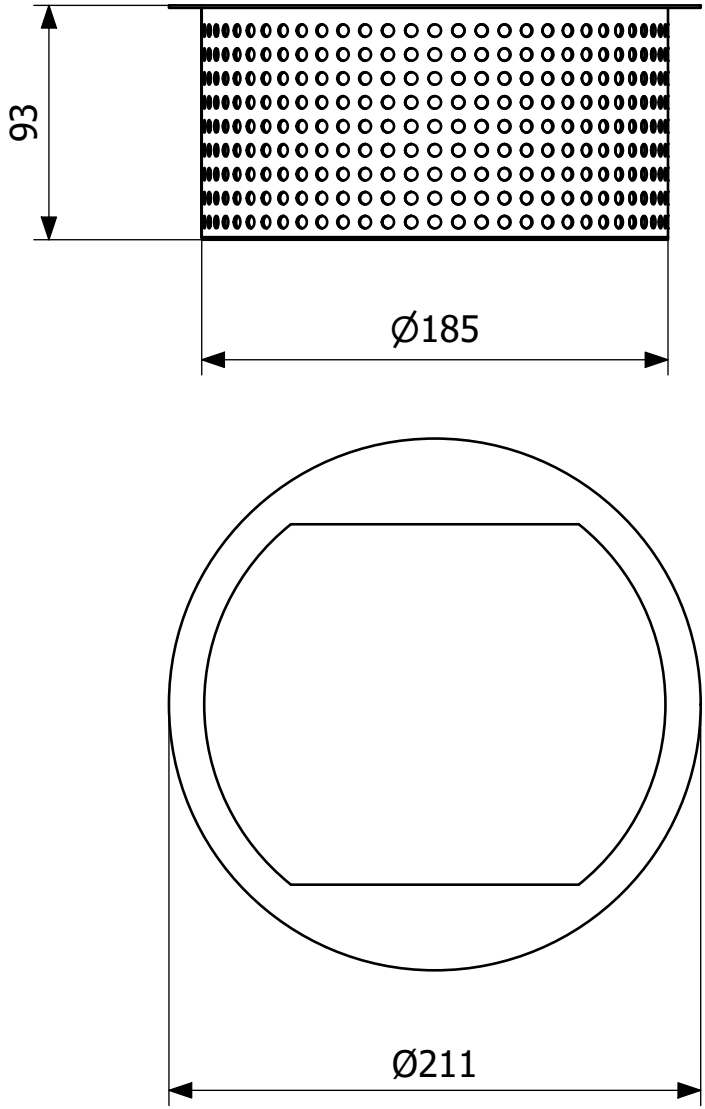
93
Ø185
Ø211