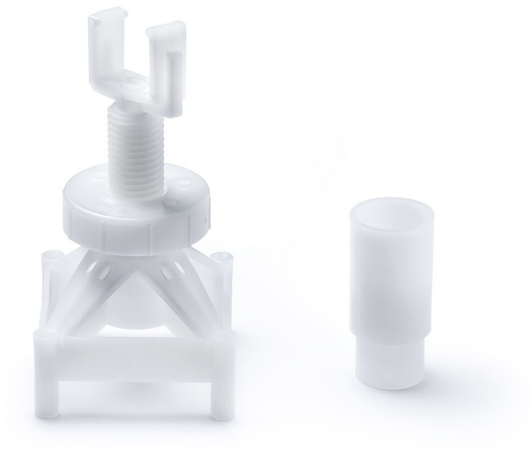

Item 855541

The Purus support is an accessory for installing Purus’ stainless steel channel drains in concrete floors. It comes as a set of 4 plastic legs, which are height-adjustable between 90-200mm and are designed to hold the channel in place while pouring concrete.

Specifications

Item Number	855541
Function	For Purus channels
Item Color	White
Material	PP
Size	90-200 mm
Version	Adjustable height

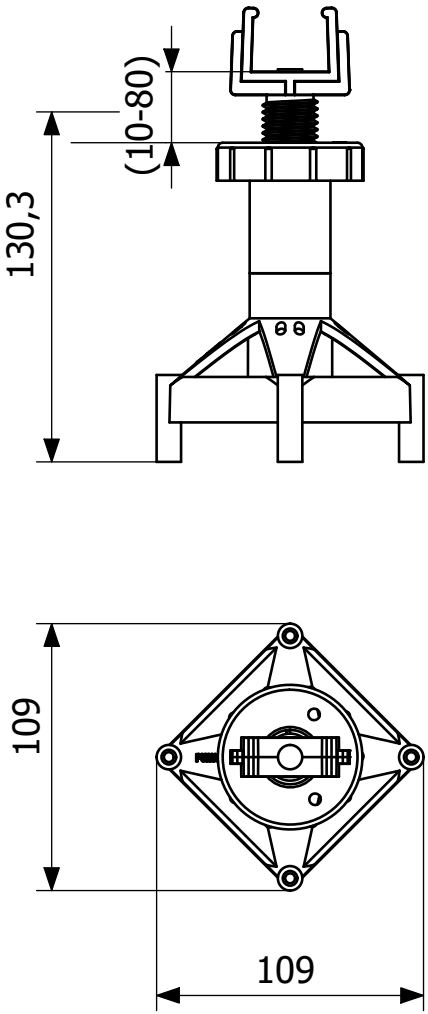
(10-80)
130,3
109
109