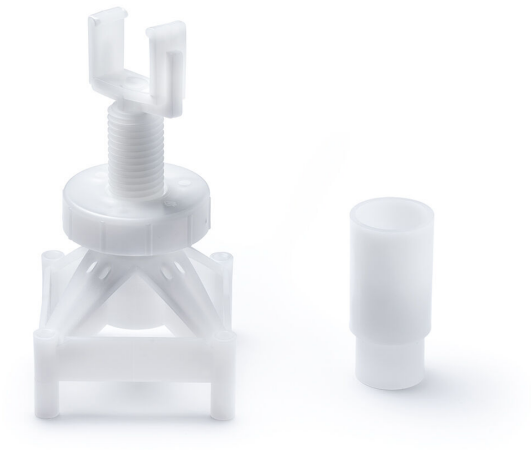

Item 07244

The Concrete installation support is an accessory for installing the Channel 100, Channel 200, Kitchen Channels, Grate and Slot Drain Modular and Industrial Channel in concrete floors. It is height adjustable from 90-200mm.

Specifications

Item Number	07244
Function	For Purus channels
Item Color	White
Material	PP
Size	90-200 mm
Version	Adjustable height

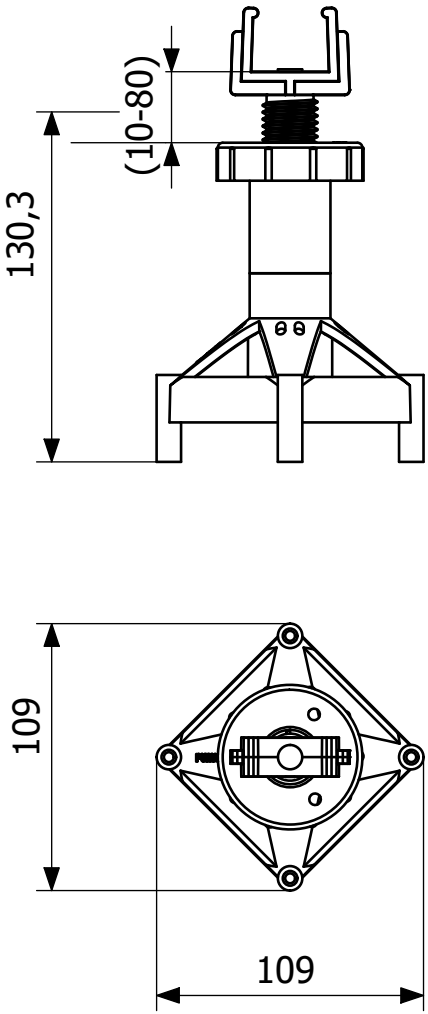
(10-80)
130,3
109
109