PURUS

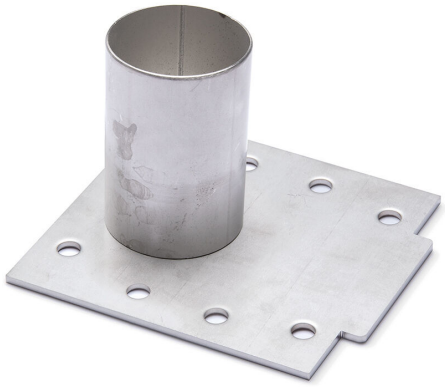

Item 855662

Screw connection in acid-resistant stainless steel with D50 socket intended for Purus channel spalte module gable.

Specifications

Item Number	855662
Function	Side outlet
Item Color	Stainless
Material	Acid-resistant stainless steel 1.4404
Size	500×500 mm
Surface	Pickled

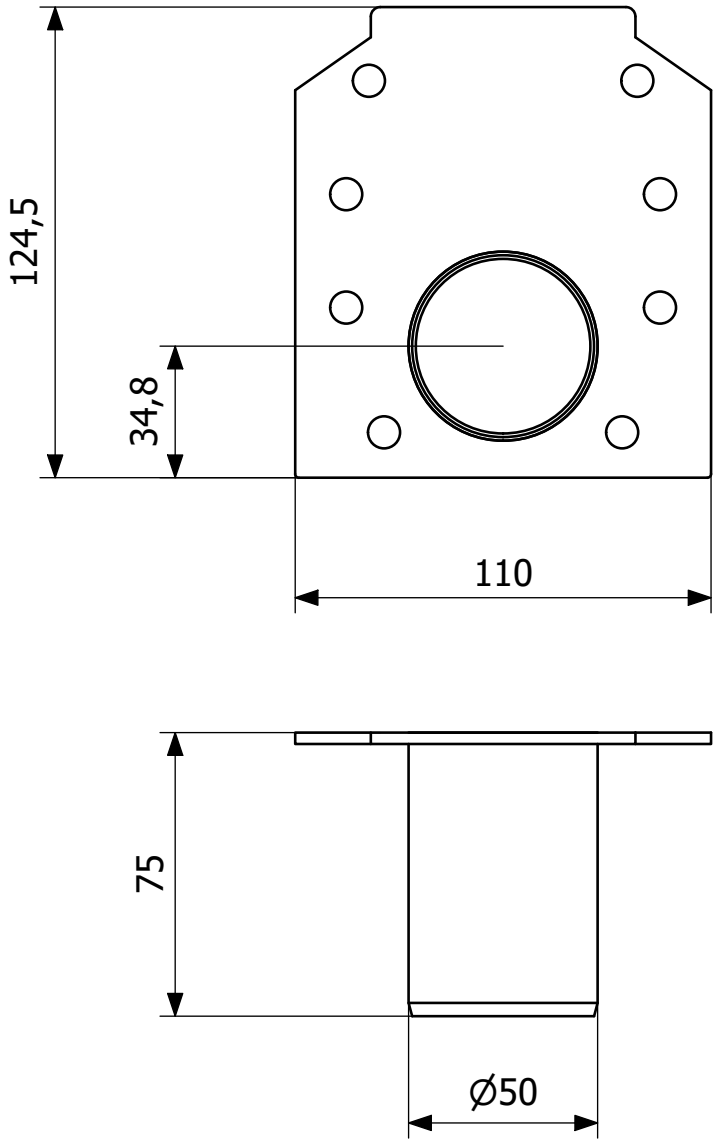
124,5
34,8
110
75
Ø50