

Item 855700

Purus channel 100 module is made of acid-resistant stainless steel for installation in concrete. The floor channel is intended for concrete, epoxy and tile floors without a waterproofing membrane. Purus channel 100 modul drain is 300×300, has an inlet and the outlet in the channel is located in the middle. Complete Purus channel 100 module with grid, outlet hous in acid-proof stainless steel and water trap.

Specifications

Item Number	855700
Dimension	Do not forget grid/outlet house
Floor Construction	Concrete flooring
Function	Central outlet
Item Color	Stainless
Material	Acid-resistant stainless steel 1.4404
Size	300×300 mm
Surface	Pickled

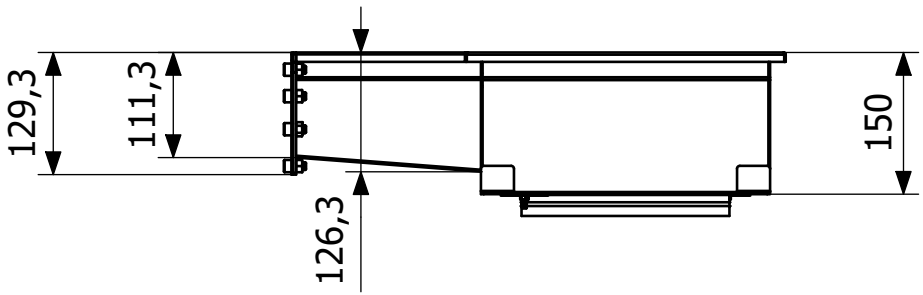
129,3
111,3
126,3
150

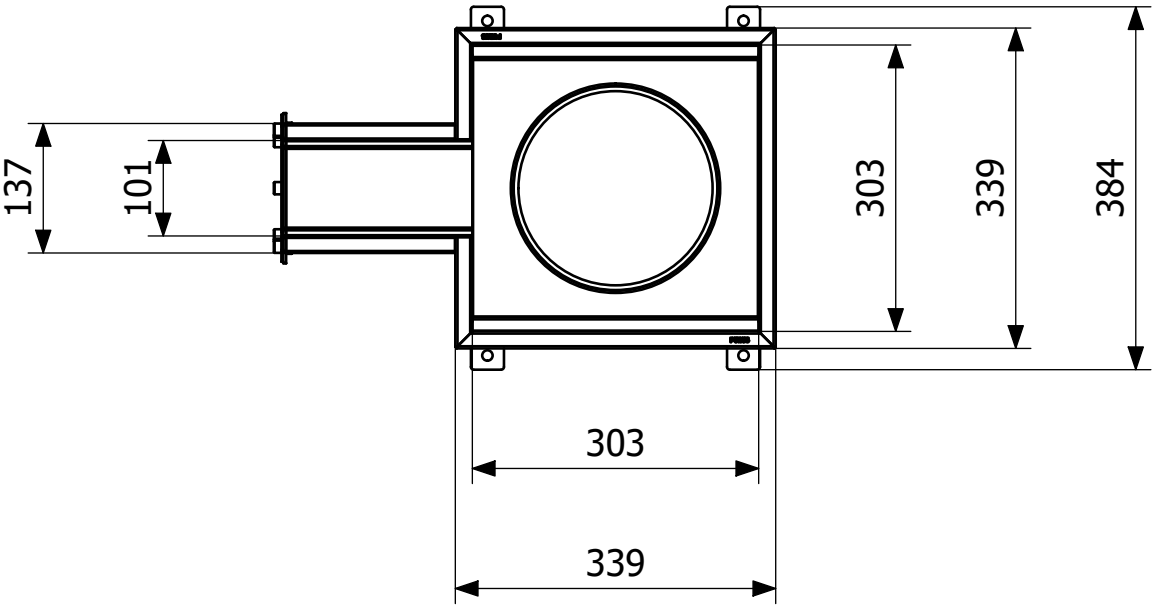
137
101
303
339
384
303
339