

Item 856908

Purus channel 100 modul 50-65 is a floor channel made of acid-resistant stainless steel for installation in concrete. The floor channel is intended for concrete, epoxy and tile floors without a waterproofing membrane. The floor channel is 100 mm wide and has a built-in fall of which the height is 50 mm and 65 mm and a length of 1000 mm. The floor channel is delivered with gasket and screw connection for installation but needs to be supplemented with grid depending on the environment and outlet house. The total height with screw joints is 129 mm.

Item 856909

Purus channel 100 modul 65-80 is a floor channel made of acid-resistant stainless steel for installation in concrete. The floor channel is intended for concrete, epoxy and tile floors without a waterproofing membrane. The floor channel is 100 mm wide and has a built-in fall of which the height is 65 mm and 80 mm and a length of 1000 mm. The floor channel is delivered with gasket and screw connection for installation but needs to be supplemented with grid depending on the environment and outlet house. The total height with screw joints is 129 mm.

Item 856910

Purus channel 100 modul 80-95 is a floor channel made of acid-resistant stainless steel for installation in concrete. The floor channel is intended for concrete, epoxy and tile floors without a waterproofing

membrane. The floor channel is 100 mm wide and has a built-in fall of which the height is 80 mm and 95 mm and a length of 1000 mm. The floor channel is delivered with gasket and screw connection for installation but needs to be supplemented with grid depending on the environment and outlet house. The total height with screw joints is 129 mm.

Item 856911

Purus channel 100 modul 95-110 is a floor channel made of acid-resistant stainless steel for installation in concrete. The floor channel is intended for concrete, epoxy and tile floors without a waterproofing membrane. The floor channel is 100 mm wide and has a built-in fall of which the height is 95 mm and 110 mm and a length of 1000 mm. The floor channel is delivered with gasket and screw connection for installation but needs to be supplemented with grid depending on the environment and outlet house. The total height with screw joints is 129 mm.

Specifications

Item Number	856908
Floor Construction	Concrete flooring
Floor Covering	Concrete
Function	With slope
Item Color	Stainless
Material	Acid-resistant stainless steel 1.4404

Size	1000×100 mm
Surface	Pickled
Version	Do not forget grid/grating

Item Number	856909
Floor Construction	Concrete flooring
Floor Covering	Concrete
Function	With slope
Item Color	Stainless
Material	Acid-resistant stainless steel 1.4404
Size	1000×100 mm
Surface	Pickled
Version	Do not forget grid/grating

Item Number	856910
Floor Construction	Concrete flooring
Floor Covering	Concrete
Function	With slope
Item Color	Stainless
Material	Acid-resistant stainless steel 1.4404
Size	1000×100 mm

Surface	Pickled
Version	Do not forget grid/grating

Item Number	856911
Floor Construction	Concrete flooring
Floor Covering	Concrete
Function	With slope
Item Color	Stainless
Material	Acid-resistant stainless steel 1.4404
Size	1000×100 mm
Surface	Pickled
Version	Do not forget grid/grating

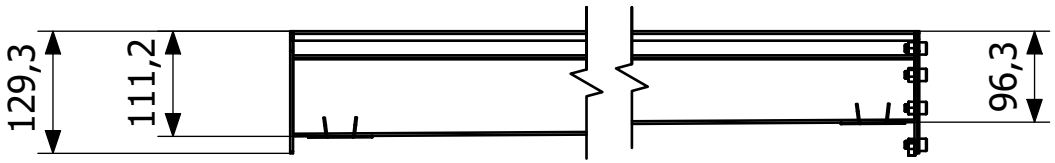
129,3
111,2
96,3

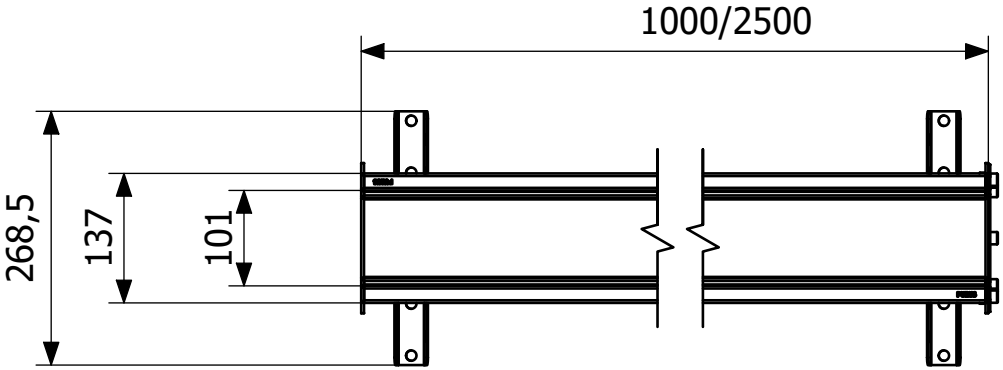
1000/2500
268,5
137
101