

Item 8120008

The PUM vertical waste outlet is a combination of a vertical waste and a water trap for wash basins and urinals with G40 connections. The odour barrier (membrane) is integrated in the vertical waste and is positioned under the lid, which can easily be lifted up for in situ cleaning and maintenance. The vertical waste replaces the usual cup-style water trap, saving space underneath the wash basin or urinal. It can be combined with floor and wall outlet kits which do not have a conventional water trap.

Specifications

Item Number	8120008
Dimension	G40
Function	For wash trough and urinal
Item Color	Stainless
Material	Stainless steel 1.4301, PP, Silicone
Pressure Flow Temp	0,6 l/s
Surface	Polished
Version	Odour trap

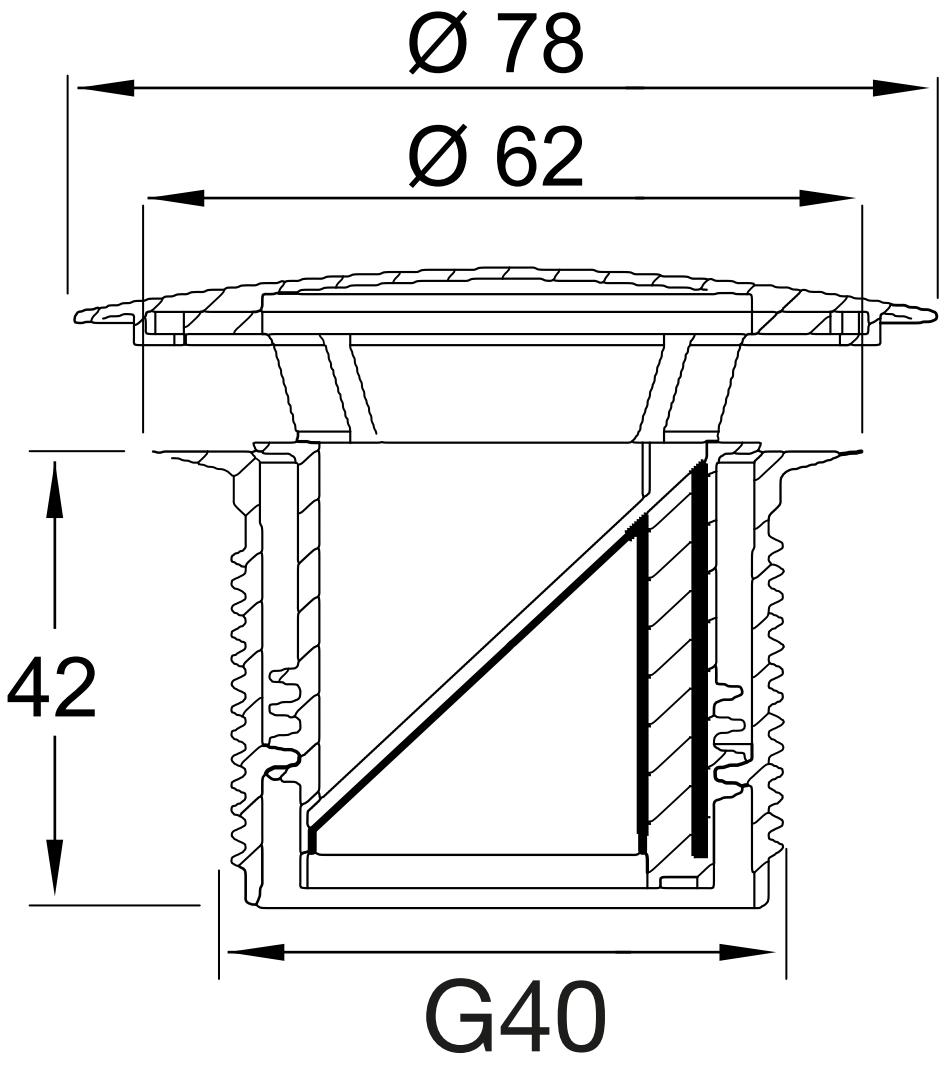
Ø 78
Ø 62
42
G40