PURUS



Item 7060705

The LRB 150 L is a stainless steel cover for Purus' 150mm diameter floor gullies when installed in concrete flooring. It includes locking clips and is designed to withstand up to 1.5 tons in weight.

Specifications

Item Number	7060705
Dimension	Ø150mm
Function	To Rens
Item Color	Stainless
Material	Stainless steel 1.4301
Pressure Flow Temp	L15
Surface	Electropolished
Version	Reinforced

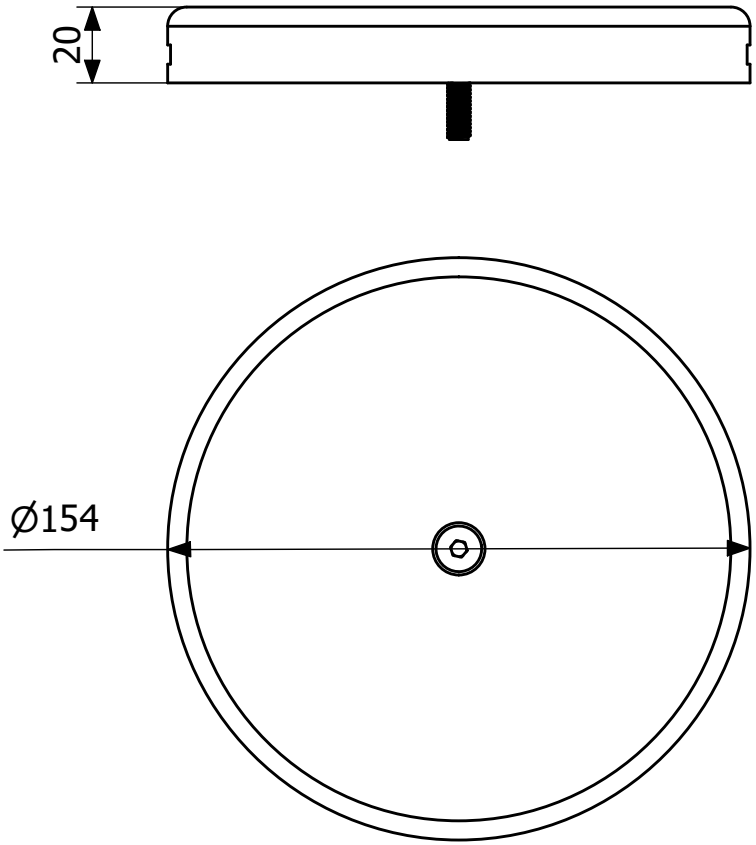
20
Ø154